DRC
PZ25-12000051
07/15/2026

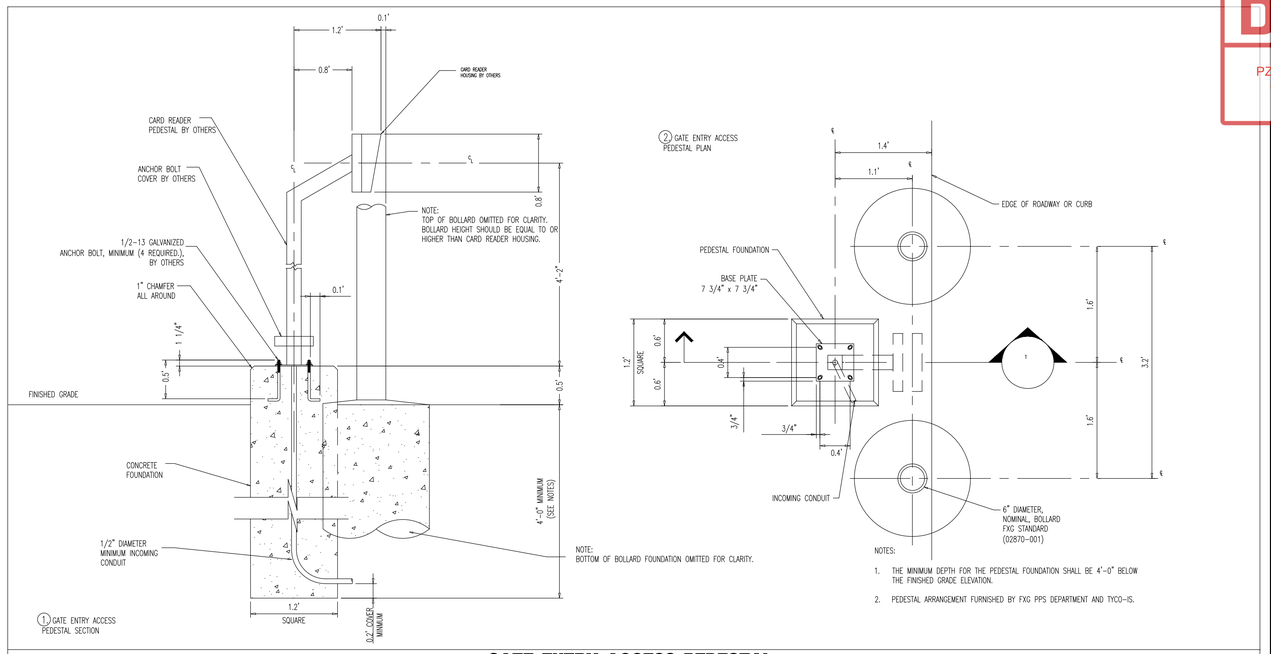

NOTES:

1. THE MINIMUM DEPTH FOR THE PEDESTAL FOUNDATION SHALL BE 4'-0" BELOW THE FINISHED GRADE ELEVATION.
2. PEDESTAL ARRANGEMENT FURNISHED BY FXG PPS DEPARTMENT AND TYCO-IS.

GATE ENTRY ACCESS PEDESTAL

NOT TO SCALE

NOTES:

1. Shop Drawings are required.
2. Work with Specification 515.
3. Materials:
   A. Pan Head Set Screws: Aluminum Alloy 2024-T4 or 7075-T73 or Stainless Steel (SS) Type 316 or 18-8 Alloy.
   B. Base Plates and Cap Plates: ASTM B209, Alloy 6061-T6
   C. Structural Pipe Tube and Bars: ASTM B221 or ASTM B429, Alloy 6061-T6
   D. End Rails 90° bends and corner bends with a maximum 4 foot spacing: Alloy 6063-T5 is permitted.

RAILING MEMBER DIMENSIONS TABLE

MEMBER	DESIGNATION	OUTSIDE DIMENSION	WALL THICKNESS
Posts	2" NPS (Sch. 40)	2.375"	0.154"
Rails	2" NPS (Sch. 40)	2.375"	0.154"
Rail Joint/Splice Sleeves	1½" NPS (Sch. 40)	1.900"	0.145"
Handrails Joint/Splice Sleeves	1" NPS (Sch. 40) 1.50 ODx0.125 Wall	1.315" 1.500"	0.133" 0.125"
Handrails	1½" NPS (Sch. 40)	1.900"	0.145"
Handrail Support Bar	1" Ø Round Bar	1.000"	N/A

E. Galvanized Steel Fasteners:
   a. Hex Head Bolts: ASTM A307 Type I or ASTM F1554 Grade 36
   b. Hex Nuts: ASTM F1554 Grade 36 fully threaded rods
   c. Hex Nuts: ASTM A563
   d. Flat Washers: ASTM F436
F. Aluminum Shims: ASTM B209, Alloy 6061
G. Bearing Pads: Plain, Fabric Reinforced, or Fabric Laminated meeting requirements of Specifications 515 & 932.

4. Fabrication:
   A. Place expansion joints at a maximum of 30'-0"spacing.
   B. Shop welding is preferred to field welding, if possible and may be approved by the Engineer to facilitate handling, but top rail must be continuous across a minimum of two posts.
   C. Continuity field splice (Detail "E"): only use to make the railing continuous for unforeseen field adjustments. Do not use field splice to accommodate a deviation from the specified radius. Do not use field splice or terminated at adjoining sections with a standard end hoop when handrails are not required.
   D. For curved longitudinal alignments, shop bend top and bottom rails and handrails to match the alignment radius. Field splice straight intermediate segments of alignment greater than 45°; position posts a maximum of 2'-0" each side of the corner, not at the corner apex.
5. Handrails are required and must be continuous at landings for:
   A. Grades Steeper than 5%
   B. Three or more steps
6. Cutting of reinforcing steel is permitted for post installed anchor bolts.

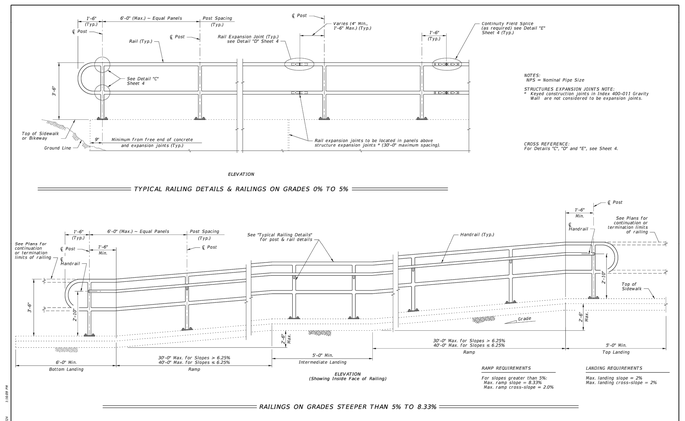

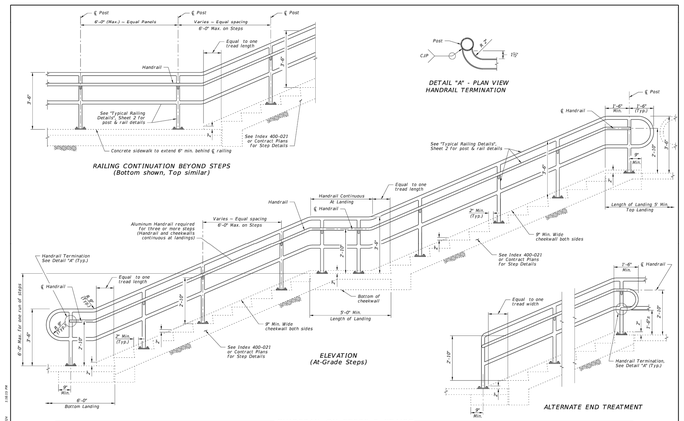

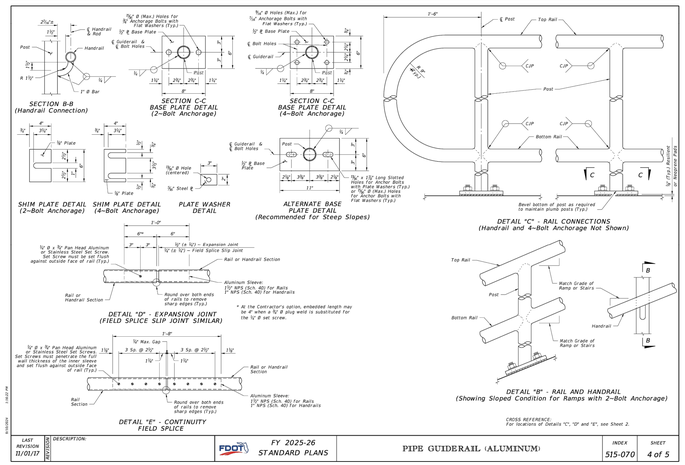

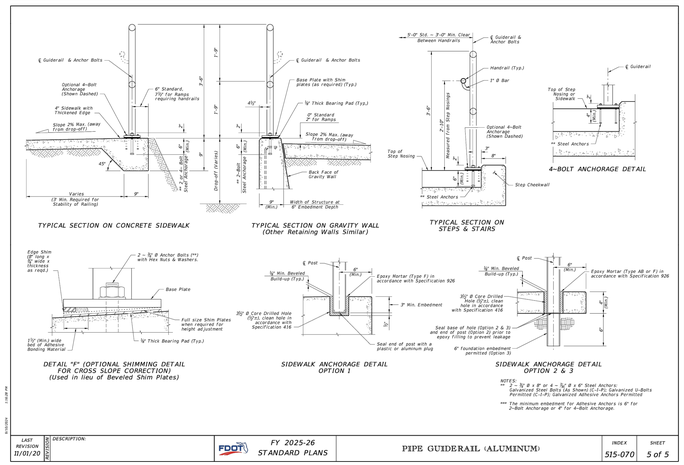

LAST REVISION 11/01/17	REVISIONS	DESCRIPTION:	FY 2025-26 STANDARD PLANS	PIPE GUIDERAIL (ALUMINUM)	INDEX 515-070	SHEET 1 of 5
						2 of 5
						3 of 5
						4 of 5
						5 of 5

Plotted: 05/22/26 – 3:55 PM, By: kkorkus, – Product Ver: 25.1
File: P:\DEDPC PROJECTS\5754 Kendale Design Build General Contractors LLC\25-01040 Pompano Beach FL\Dwg\Plan Sheets\057542501040SD1.dwg, ---> C4.01 CONSTRUCTION DETAILS

COPYRIGHT © 2026 – DYNAMIC ENGINEERING CONSULTANTS, PC – ALL RIGHTS RESERVED

DYNAMIC ENGINEERING CONSULTANTS, PC
TRANSPORTATION • STRUCTURES • ENVIRONMENTAL

REV.	DATE	COMMENTS	BY
1	05/11/26	AGENCY COMMENTS	DEW

THIS PLAN SET IS FOR PERMITTING PURPOSES ONLY AND MAY NOT BE USED FOR CONSTRUCTION

DRAWN BY: AR | DESIGNED BY: JMP | CHECKED BY: CAR | CHECKED BY: –

PROJECT: KENDALE DESIGN BUILD
PROPOSED LOADING DOCK IMPROVEMENTS
PARCEL ID: 484221100031
2600 NW 19TH STREET
POMPANO BEACH, FLORIDA 33069

811 Know what's below. Call before you dig.
PROTECT YOURSELF
ALL STATES REQUIRE NOTIFICATION OF EXCAVATORS, DESIGNERS, OR ANY PERSON PREPARING TO DISTURB THE EARTH'S SURFACE ANYWHERE IN ANY STATE
FOR STATE SPECIFIC DIRECT PHONE NUMBERS VISIT: WWW.CALL811.COM

DYNAMIC ENGINEERING
LAND DEVELOPMENT CONSULTING • PERMITTING
GEOTECHNICAL • ENVIRONMENTAL
TRAFFIC • SURVEY • PLANNING & ZONING
100 NE 5th Avenue
Suite B2
Delray Beach, FL 33483
T: 561.921.8570
Offices conveniently located throughout the United States:
New Jersey | Delaware | Texas | Maryland | Pennsylvania | Texas
Florida Certificate of Authorization No. 32535
www.dynamicec.com

MICHAEL D. MILES
PROFESSIONAL ENGINEER
FLORIDA LICENSE No. 81313
DATE:

JACQUELINE C. PACHAY
2026.06.01 16:50:47-04'00'
STATE OF FLORIDA PROFESSIONAL ENGINEER
LICENSE No. 99305
THIS ITEM HAS BEEN DIGITALLY SIGNED AND SEALED BY JACQUELINE C. PACHAY, P.E. ON THE DATE ADJACENT TO THE SEAL. PRINTED COPIES OF THIS DOCUMENT ARE NOT CONSIDERED SIGNED AND SEALED AND MAY NOT BE MODIFIED.

TITLE: CONSTRUCTION DETAILS

SCALE: (V) AS (V) NOTED | DATE: 06/30/2025
PROJECT No: 5754-25-01040

SHEET No: C4.01 | Rev. #: 1